SED0030

SED0030-XL

SED0030

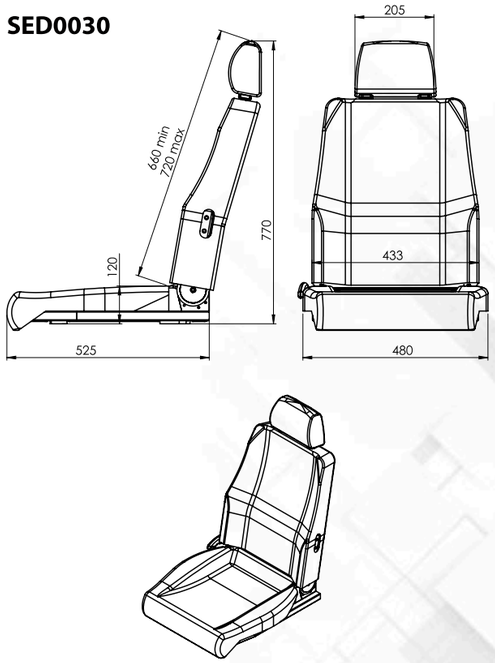

SED0030-XL

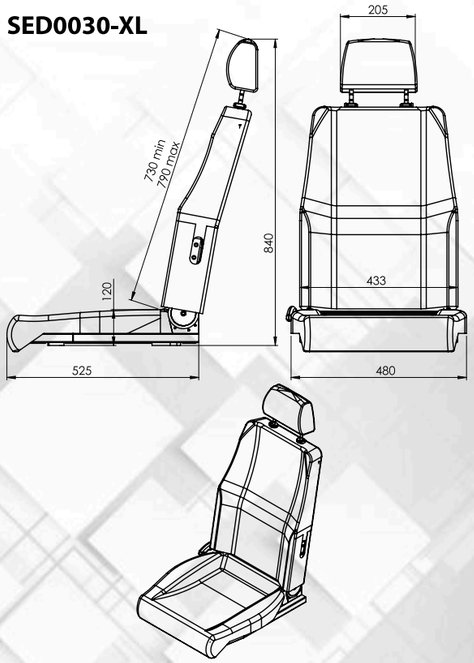

SEAT FOR SWIVEL BASES / C 400 / EC 400

It fits perfectly with all our line of bases, especially on:
- swivel base
- outgoing swivel base EC 400
- outgoing swivel base C 400

This range of seats can be combined with any internal vehicle equipment and is installed where it is not possible matched to the swivel base of the original seat.

Thanks to its small dimensions, it can be adapted to a large number of vehicles, thus allowing an easy exit from the passenger compartment.

The special shape of the sponges guarantees a comfortable yet secure seat for the stability of the person. The seams are all handmade, ensuring the highest quality on the market
It is equipped with a side lever with ergonomic grip for lowering of the backrest.
On request it can be supplied complete with armrests.